BLOCK Contact
TERMINAL BLOCKS

377SF-120160-508R Series

5.08mm Pitch

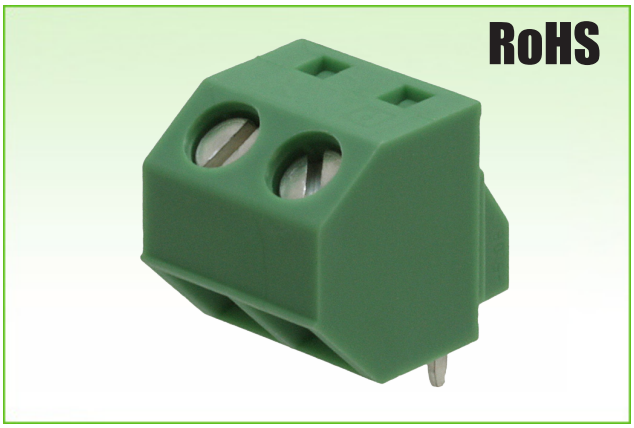

	c UL us
Rated Voltage	300V
Rated Current	10A
Insulation Withstand Voltage	AC 2000V / Min.
Temperature Range	-40°C to +105°C
Max. Soldering	+250°C for 5 sec.
Torque	0.4Nm (3.5lb.in)
Strip Length	7mm
Wire Range	26-16AWG

Units: mm

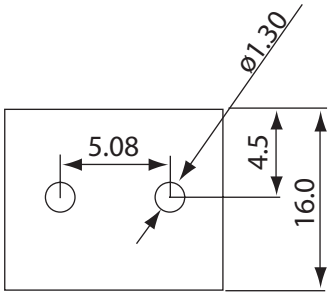

① Housing: PA66, UL94V-0
② Pin Header: Brass, Tin Plated
③ Wire Cage: Brass, Nickel Plated
④ Screws: M2.5, Steel, Zinc Plated

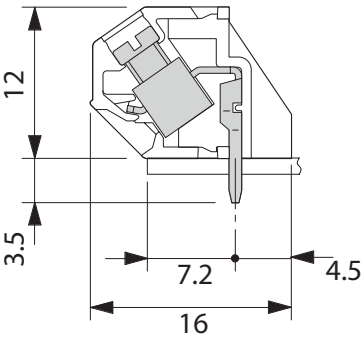

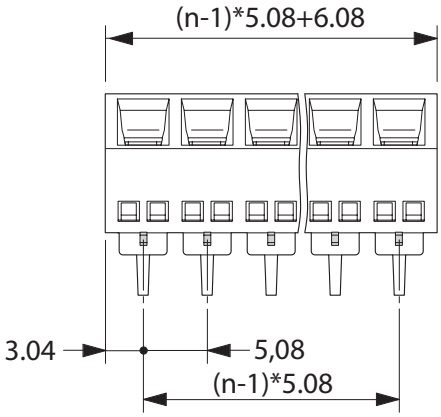

Part Numbering System:

377SF-120160-508R - XXP - XXX
① ② ③

① **Series**
② **Number of Poles: 02, 03, ..., 24**
③ **Insulator Color: GRN = Green BLK = Black ORG = Orange**
GRY = Gray RED = Red BLU = Blue
YEL = Yellow WHI = White TRA = Transparent,