DC2402A V2.0

24CH x 2 Lines
1/16Duty,1/5Bias

1. External Dimension

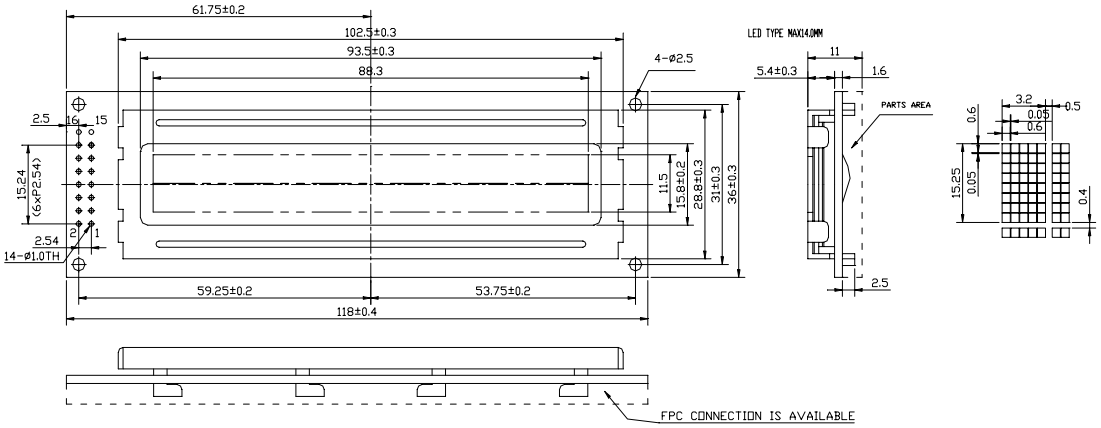

2. Pin Table

1	2	3	4	5	6	7	8	9	10	11	12	13	14	15	16
Vss	Vdd	V0	RS	R/W	E	DB0	DB1	DB2	DB3	DB4	DB5	DB6	DB7	LED+	LED-

3. Block Diagram

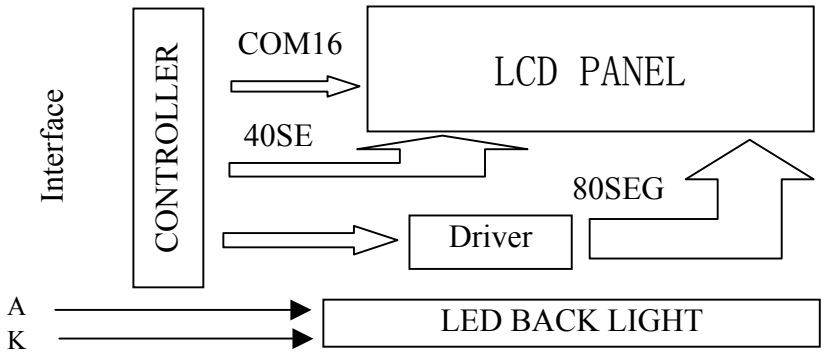

4. Electrical Characteristics (Ta=25℃,Vdd=5.0V±0.25V)

Item	Symbol	Test Condition	Min.	Typ.	Max.	Unit
Input High Voltage	Vih	-	2.2		Vdd	V
Input Low Voltage	Vil	-	-0.3		0.6	V
Output High Voltage	Voh	-I OH=0.2mA	2.4			V
Output Low Voltage	Vol	I OL=1.2mA			0.4	V
Supply Current	Idd	Vdd=5.0V		2	3	mA
Operating Voltage for LCD	Vdd-V0	STN		4.7		V
		TN		-		V